Chapter 17 Solutions - Operations Management

Operations Management (Jinan University)

Scan to open on Studocu

Studocu is not sponsored or endorsed by any college or university
Downloaded by username error (usernameerror768@gmail.com)

Chapter 17 Solutions

1. a.

Path	Expected Path Time
1–2–4–7–10–12	23
1–2–5–8–10–12	24
1–3–6–9–11–12	31*

b.

Path	Expected Path Time
1–2–4–6–8–9	41
1–2–5–6–8–9	48
1–2–5–7–8–9	55*
1–3–7–8–9	40

c.

Path	Expected Path Time
1–2–5–12–16	44*
1–3–6–13–16	39
1–3–7–14–16	41
1–4–8–9–10–11–15–16	35
1–4–8–10–11–15–16	38

2. a.

Choose topic
Library res.
Outline

Shop
Select
Install

Write Paper
Grammar ck
Submit paper

b. 1. AOA diagram

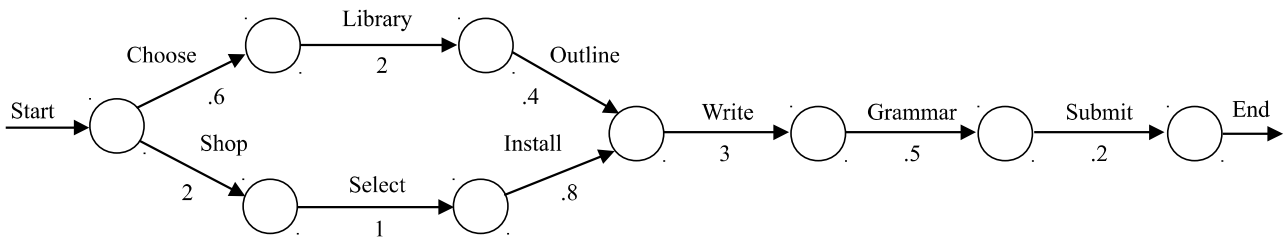

This document is available on studocu
Downloaded by username error (usernameerror768@gmail.com)

Solutions (continued)

2. AON diagram

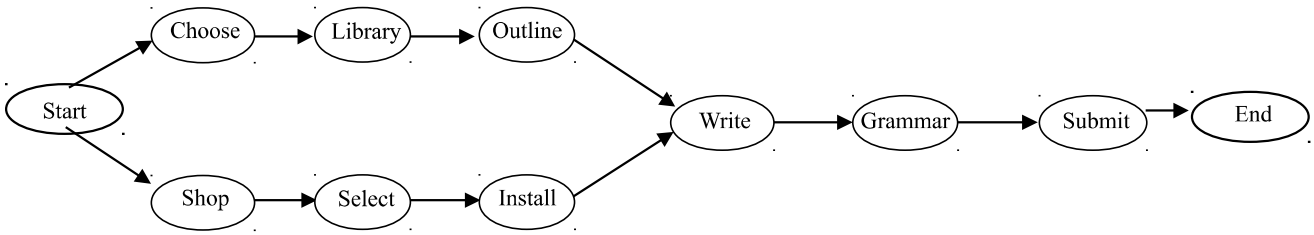

c. 7.5 Shop, Select, Install, Write, Grammar, Submit

d. Parallel paths.

3. (1) Draw the network

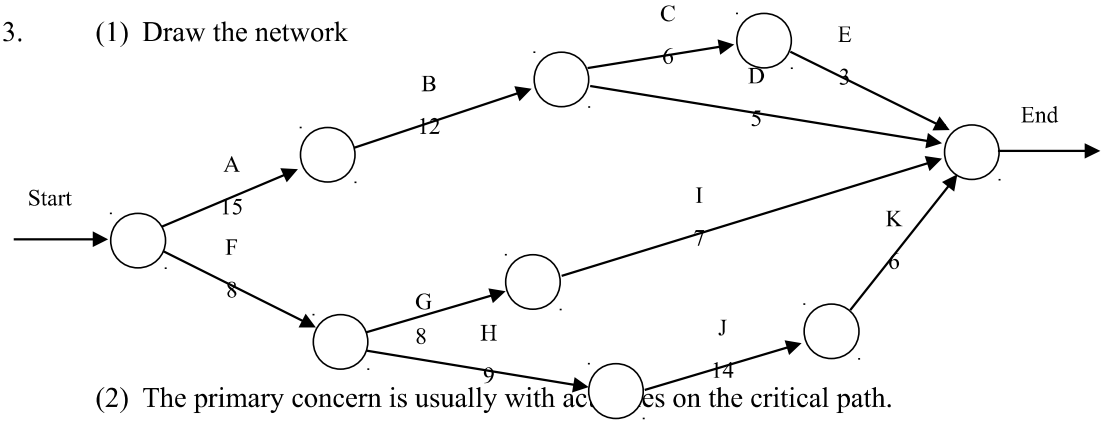

(2) The primary concern is usually with activities on the critical path.

Path	Expected Time (days)
A–B–C–E	36
A–B–D	32
F–G–I	23
F–H–J–K	37 [critical path]

In addition, the manager must be concerned with other activities that have little slack. For instance, activities on path A–B–C–E– have a total of one day's slack between them.

Downloaded by username error (usernameerror768@gmail.com)

Solutions (continued)

4. a. Case 1: Activity-on-arrow diagram

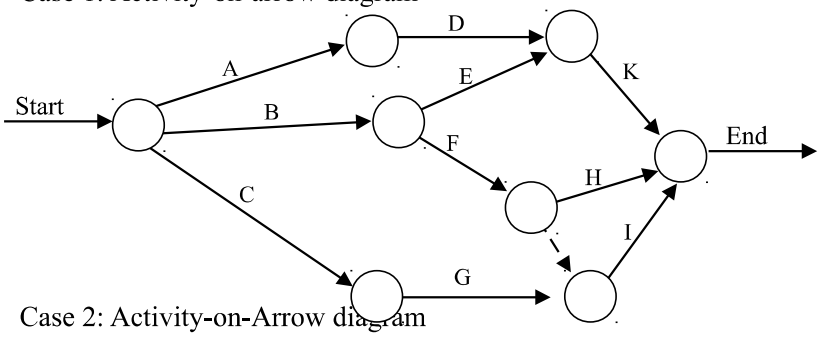

Case 2: Activity-on-Arrow diagram

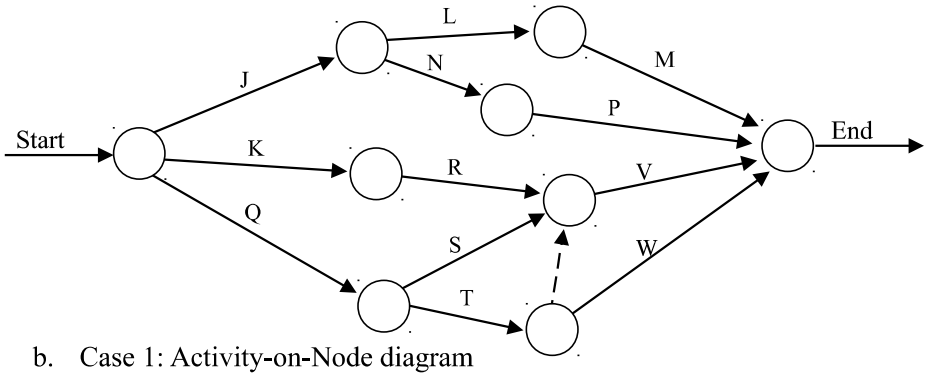

4. b. Case 1: Activity-on-Node diagram

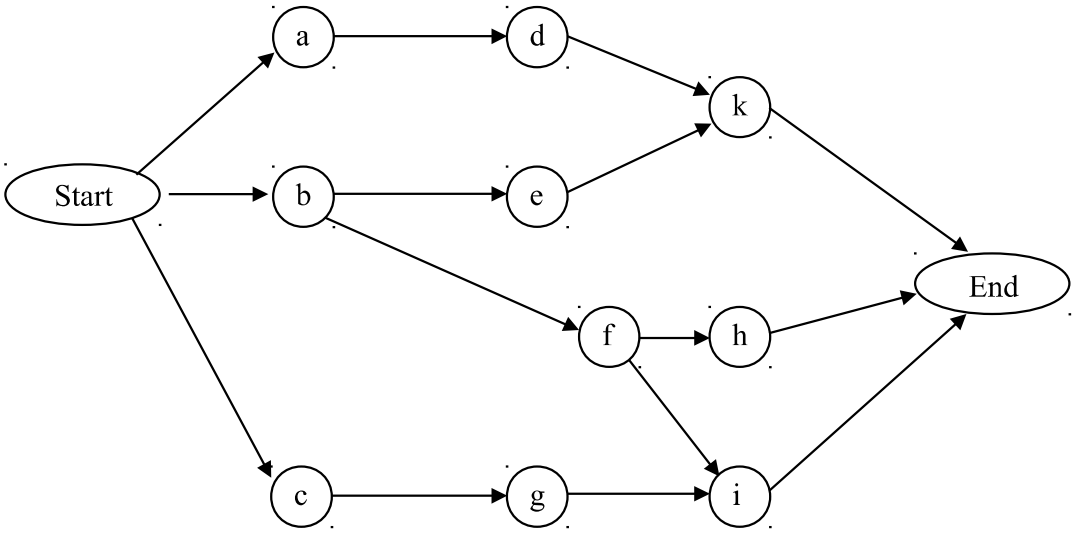

This document is available on studocu

Downloaded by username error (usernameerror768@gmail.com)

Case 2: Activity-on-Node diagram

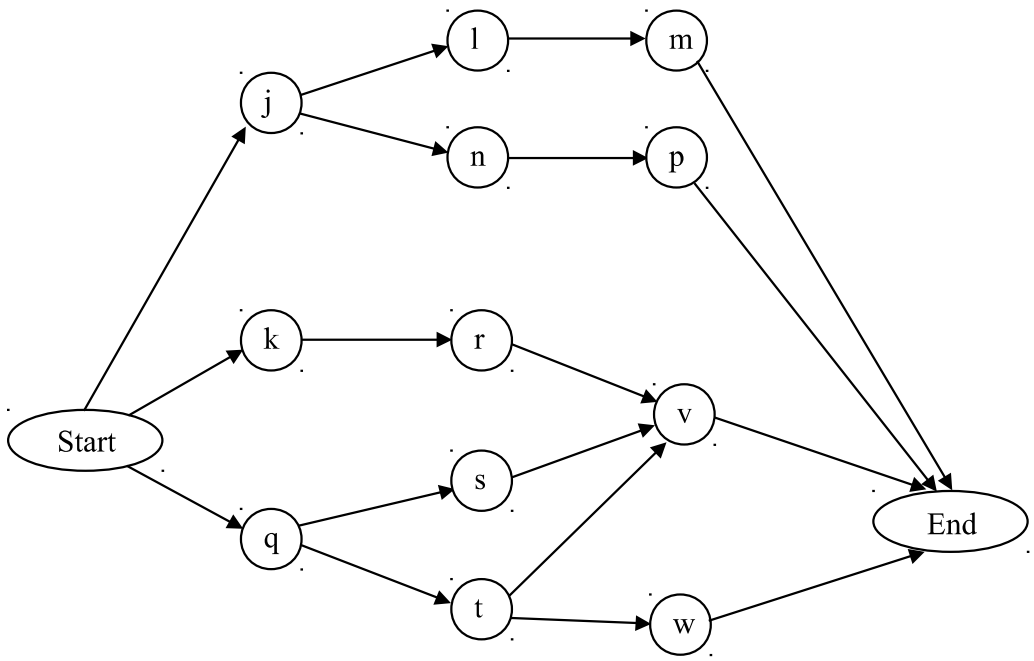

Downloaded by username error (usernameerror768@gmail.com)

5. a.

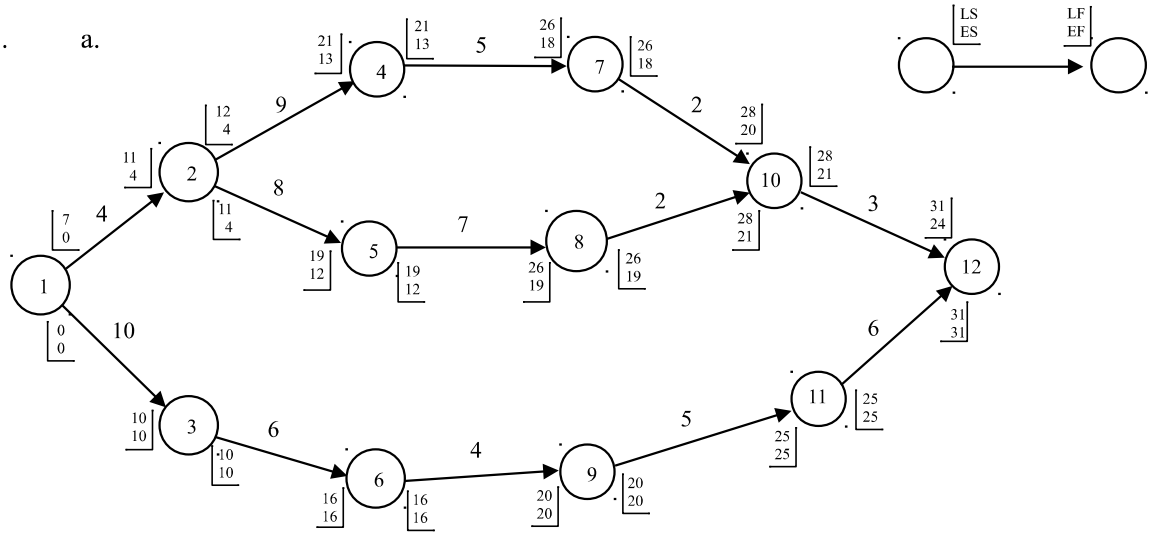

Summary:

Activity	ES	EF	LF	LS	Slack
1–2	0	4	11	7	7
2–4	4	13	21	12	8
4–7	13	18	26	21	8
7–10	18	20	28	26	8
10–12	21	24	31	28	7
2–5	4	12	19	11	7
5–8	12	19	26	19	7
8–10	19	21	28	26	7
1–3	0	10	10	0	0
3–6	10	16	16	10	0
6–9	16	20	20	16	0
9–11	20	25	25	20	0
11–12	25	31	31	25	0

This document is available on studocu

Downloaded by username error (usernameerror768@gmail.com)

Solutions (continued)

5. b.

Summary:

Activity	ES	EF	LF	LS	Slack
1	0	5	0	5	0
2	5	23	5	23	0
3	5	18	20	33	15
4	23	26	37	40	14
5	23	33	23	33	0
6	33	37	40	44	7
7	33	44	33	44	0
8	44	53	44	53	0
9	53	55	53	55	0

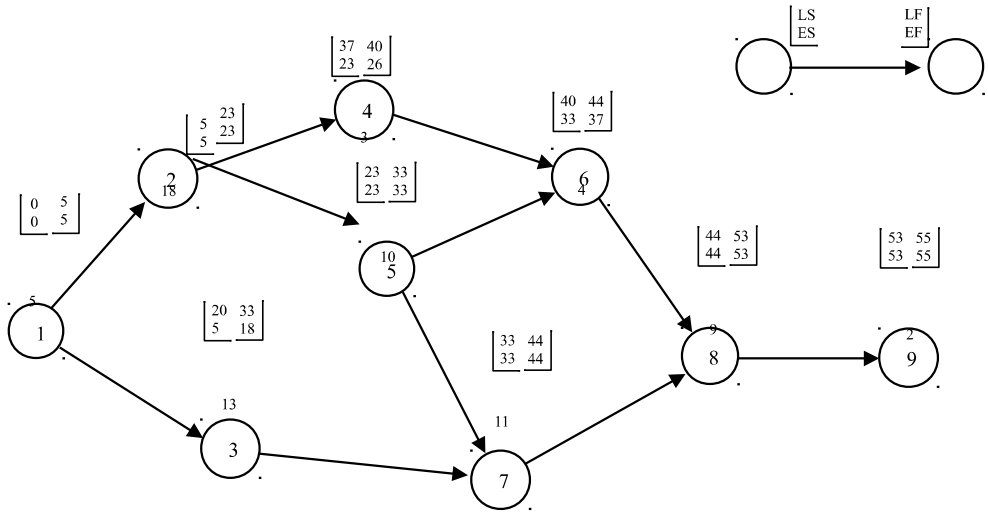

Downloaded by username error (usernameerror768@gmail.com)

Solutions (continued)

5. c.

Activity	ES	EF	LF	LS	Slack
1–2	0	15	16	1	1
2–4	15	27	28	16	1
4–7	27	33	34	28	1
7–9	33	36	37	34	1
4–9	27	32	37	32	5
1–3	0	8	8	0	0
3–6	8	16	30	22	14
6–9	16	23	37	30	14
3–5	8	17	17	8	0
5–8	17	31	31	17	0
8–9	31	37	37	31	0

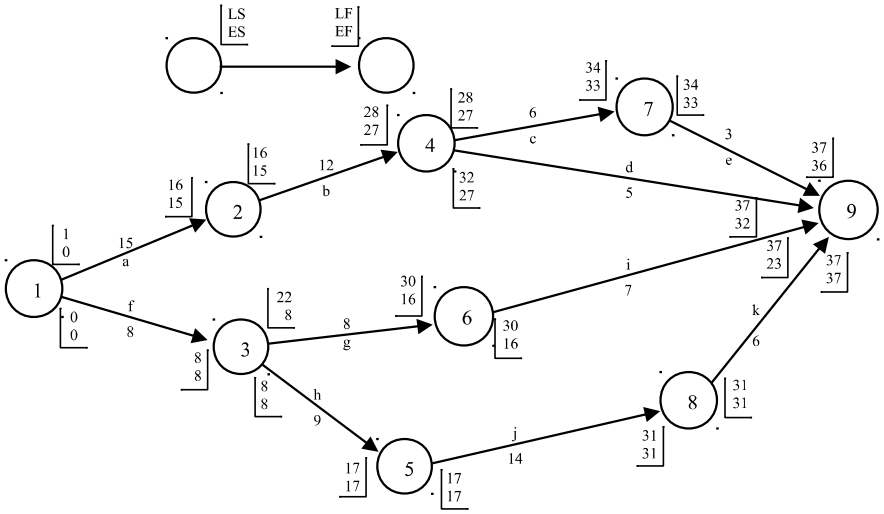

This document is available on studocu

Downloaded by username error (usernameerror768@gmail.com)

Solutions (continued)

6. The network diagram is given in Problem 1, Part a.

For path 1–2–4–7–10–12, the 13 weeks required for 1–2–4 has been reduced to 12 weeks. On path 1–2–5–8–10–12, the 12 weeks required for 1–2–5 has been increased to (about) 14 weeks [12+(8–6)]. However, 1–2–5–8–10–12 is not along the critical path and has a slack of 7 weeks.

Along path 1–3–6–9–11–12, the 13 weeks required to complete 1–3 and half of 3–6 has been reduced to 12 weeks. A reduction of one week along the critical path.

The project may be completed in (31–1) = 30 weeks, if all following activities are completed according to the original estimate.

7. a.

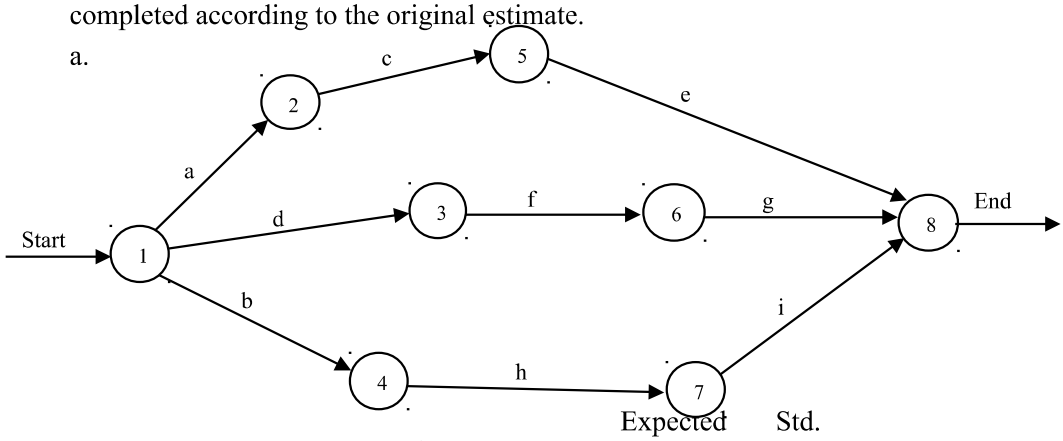

b.

Activity	t_e	σ^2	Path	Expected Duration	Std. Dev.	Z_{24}	Prob.
a	6	4/36	a–c–e	20.5	1.118	3.13	
b	8.5	9/36	d–f–g	21.5	1.344	1.86	0/.9686
c	8.17	25/36	b–h–i	19.5	0.726	6.19	
d	12	36/36					
e	6.33	16/36	For Z_{21}				Probability
f	6	4/36	$\frac{(21-20.5)}{1.118}$	$= .447 \approx 0.45$			0.6736
g	3.5	25/36					
h	4.17	1/36					
i	6.83	9/36	$\frac{(21-21.5)}{1.344}$	$= -0.3721 \approx -0.37$			0.3557
			$\frac{(21-19.5)}{0.7265}$	$= 2.065 \approx 2.07$			0.9808

0.6736 x 0.3557 x 0.9808 = 0.235

Downloaded by username error (usernameerror768@gmail.com)

Solutions (continued)

c. On the 8th day the network could be reviewed as follows:
*Assume it is the beginning of the 8th day

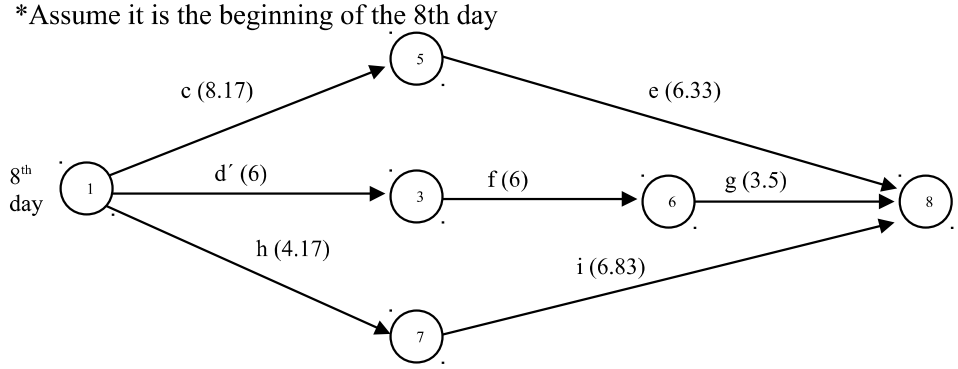

Replace d by d´ and merge nodes (2) and (4) with (1).

d´: $t_e = 6$: $\sigma^2 = 4/36$

7 days were used to complete activities a, b and one half of d. In the modified network:

	Path	Expected Duration from 8th day	Expected duration from the start of the project	Variance
1.	c–e	14.50	14.50 + 7 = 21.5	41/36
2.	d´–f–g	15.5	15.5 + 7 = 22.5	33/36
3.	h–i	11	11 + 7 = 18	10/36

	Path	Standard Dev.	Z_{24}	Probability (24)
1.	c–e	1.0672	$\frac{24-21.5}{1.0672} = 2.343$	.9904
2.	d´–f–g	0.9574	$\frac{24-22.5}{0.9574} = 1.567$	.9418
3.	h–i	0.5270	$\frac{24-18}{0.527} = 11.384$	

.9904 x .9418 = .9328

	Path	Z_{21}	Probability (21)
1.	c–e	$\frac{21-21.5}{1.0672} = -0.469$	0.3192
2.	d´–f–g	$\frac{21-22.5}{0.9574} = -1.567$	0.0582
3.	h–i	$\frac{21-18}{0.527} = 5.692$	

.3192 (.0582) = 0.0186

8.

Path	Expected Duration	Std. Dev.	Z_{16}	Z_{15}	Z_{13}
A	10	1.1	5.45	4.55	2.73
B	8	1.414	5.66	4.95	3.54
C	12	1.	4	3	1
D	15	1.7	0.59	0	–1.18
E	14	1.2	1.67	0.83	–0.83

This document is available on studocu

Downloaded by username error (usernameerror768@gmail.com)

Solutions (continued)

(a) Prob. ($T \leq 16$) = 1 x 1 x 1 x 0.7224 x 0.9525 = 0.6881
(b) Prob. ($T \leq 15$) = 1 x 1 x 1 x 0.50 x 0.7967 = 0.3984
(c) Prob. ($T \leq 13$) = .9968 x 1 x 0.8413 x .119 x .2033 = .0203

9. Solution

Path	Expected duration	Std. dev.	z	Probability
1–2–3	4 + 5 = 9	1.64	0.61	.7291
1–3	8	1.60	1.25	.8944

P(duration > 10 weeks): 1 – .7291 (.8944) = .3479

10. Solution

a.

Path	Expected duration	Std. Dev.	z for 11 wk.	Probability
1–2–4	4 + 6 = 10	1.14	0.88	.8106
1–3–4	3 + 9 = 12	2.00	–0.50	.3085

P(duration $\leq$ 11 weeks): .8106(.3085) = .2501. Yes, the manager should be concerned because the probability of finishing on schedule is only about .25.

b.

Path	Expected duration	Std. dev.	z for 12 wk.	Probability
1–2–4	4 + 6 = 10	1.14	1.75	.9599
1–3–4	3 + 9 = 12	2.00	0	.5000

P(duration $\geq$ 12 weeks) = 1 – .9599(.5000) = .52.

11. Project Management

a.

Path	Mean	Var.	Std. Dev.	z_{49}	Prob.	z_{46}	Prob.
1–2–3–8–11	37.34	1.056	1.027	11.35	1	8.43	1
1–2–4–6–11	43	5.11	2.26	2.65	.996	1.33	.9082
1–2–4–7–11	40	0.8056	0.898	10.02	1	3.34	1
1–2–5–10–9–11	46.83	1.25	1.118	1.94	.9738	–0.74	.2296

b. P($T \geq$ 49 wk.) = 1 – [(.9738) (.996)] = .0301

c. P($T \leq$ 46 wk.) = .9082 (.2296) = .2085

Downloaded by username error (usernameerror768@gmail.com)

Solutions (continued)

12.

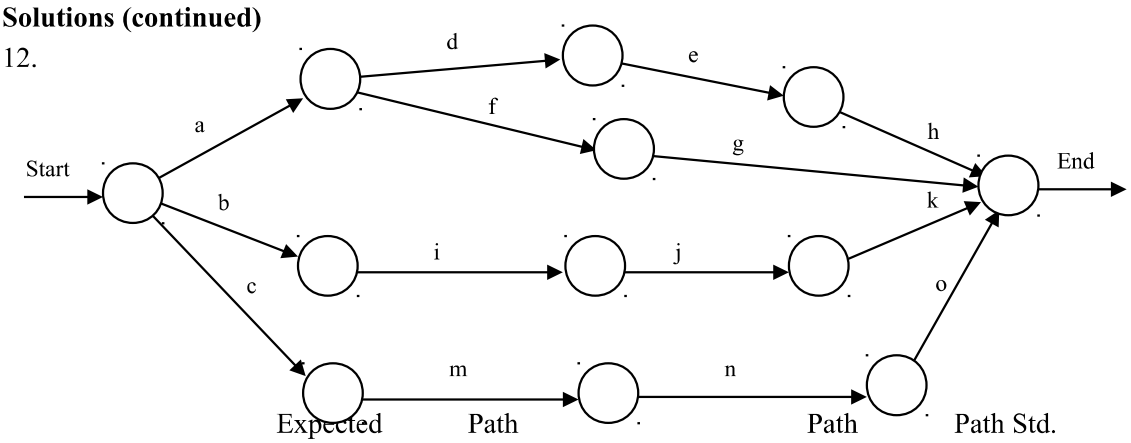

Activity	Expected Duration	Path Mean	Variance	Path Variance	Path Std. Dev.
a	4.	24.34	16/36	1.83	1.354
d	8.		16/36		
e	9.17		25/36		
h	3.17		9/36		
f	4.5	15.5	25/36	1.58	1.258
g	7.		16/36		
	4.[a]		16/36		
b	2.17	14.83	1/36	1.03	1.014
i	3.33		16/36		
j	4.		4/36		
k	5.33		16/36		
c	8.17	26.17*	49/36	2.75	1.658
m	1.		0		
n	7.5		25/36		
o	9.5		25/36		

*critical path duration

This document is available on studocu

Downloaded by username error (usernameerror768@gmail.com)

Solutions (continued)

Path	Mean	Std. Dev.	z_{27}	Prob.	z_{26}	Prob.
a–d–e–h	24.34	1.354	1.96	.9750	1.23	.8907
a–f–g	15.5	1.258	9.14		8.35	
b–i–j–k	14.83	1.014	12.00		11.00	
c–m–n–o	26.17	1.658	.50	.6915	–0.10	.4602

Prob. ($500): .9750 (.6915) = .6742

Prob. ($1000): .8907 (.4602) = .4099

13. a.

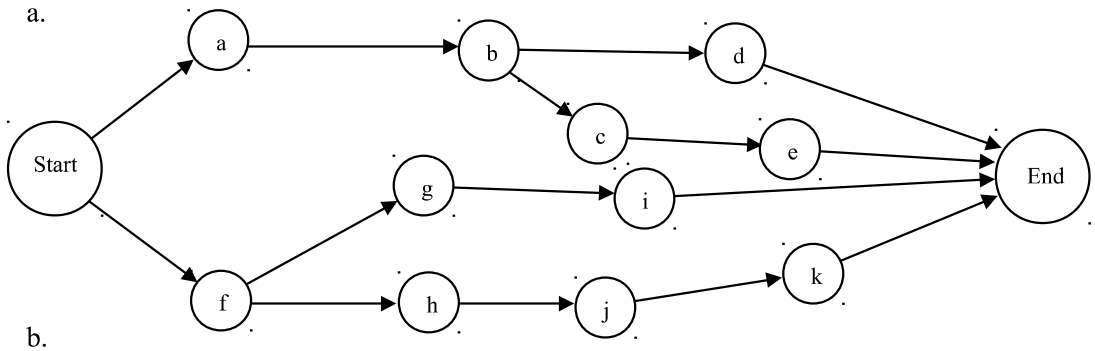

b.

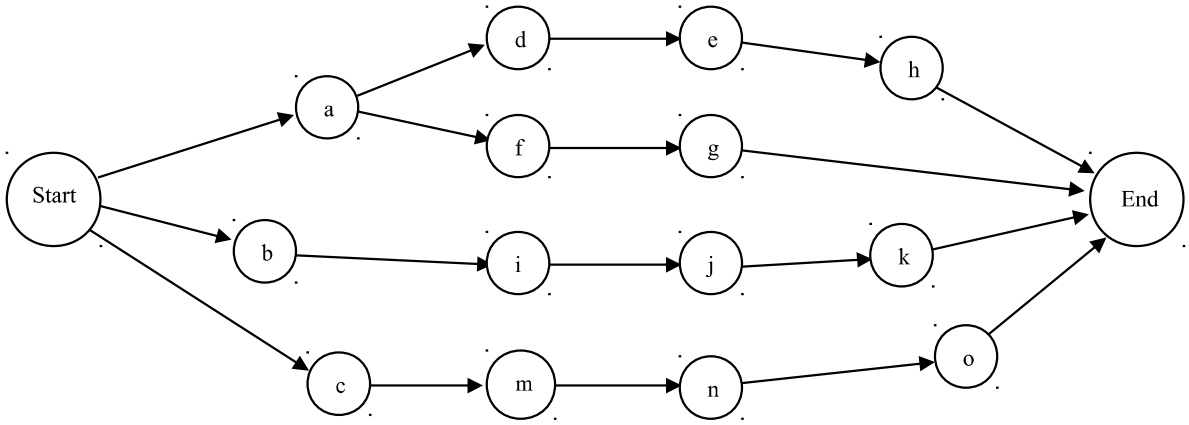

Downloaded by username error (usernameerror768@gmail.com)

Solutions (continued)

14.

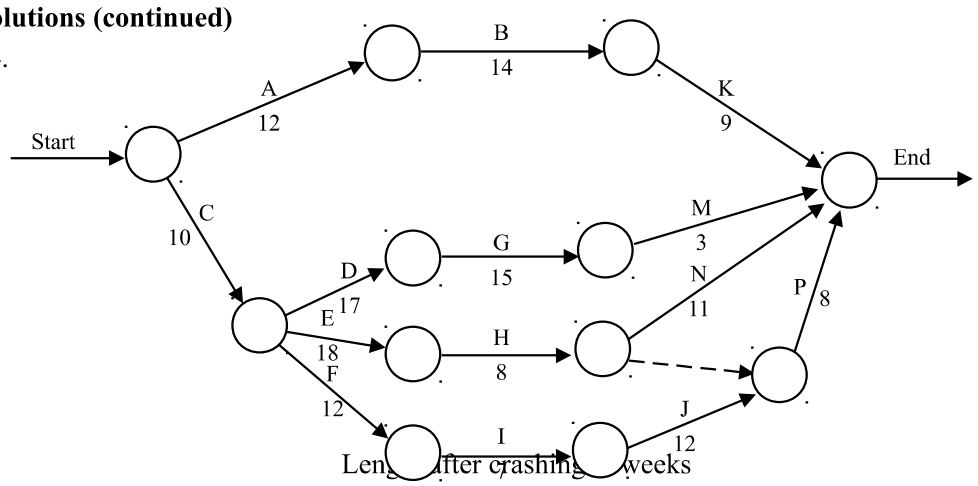

Length after crashing, weeks

Path	N: 0	1	2	3	4	5
A–B–K	35					
C–E–H–P	44	43	42	42	42	40
C–D–G–M	45	44	43	43		
C–E–H–N	47	46	45	45	45	44
C–F–I–J–P	49	48	47	46	45	44
Activity Crashed	–	c	c	f	f	e,p
Cost	–	$5,000	5,000	12,000	15,000	36,000
Cum. Cost	–	$5,000	10,000	22,000	37,000	73,000

This document is available on studocu

Downloaded by username error (usernameerror768@gmail.com)

Solutions (continued)

15.

Activity	1st week	2nd week	3rd week	Weeks Crashed 1	2	3	4	5	6
1–2	$18 [2]	$22 [6]	–		$18				$22
2–5	24	25	25						
5–7	30	30	35						
7–11	15 [1]	20 [3]	–	15		20			
11–13	30 [4]	33 [5]	36				30	33	
1–3	12 [6]	24	26						12
3–8	–	–	–						
8–11	40	40	40						
3–9	3	10	12						
9–12	2	7	10						
12–13	26	–	–						
1–4	10 [5]	15	25					10	
4–6	8 [4]	13	–				8		
6–10	5 [3]	12 [6]	–			5			12
10–12	14	15	–						
				$15	$18	$25	$38	$43	$46

Path	Weeks Crashed 0	1	2	3	4	5	6
1–2–5–7–11–13	35 wk.	34	33	32	31	30	29
1–3–8–11–13	32			32	31	30	29
1–3–9–12–13	20						
1–4–6–10–12–13	33		33	32	31	30	29

Downloaded by username error (usernameerror768@gmail.com)

Solutions (continued)

Summary:

Project Length	Cum. wk. Shortened	Cum. Crash Costs ($0000)	Indirect Costs ($000)	Total Cost ($000)
35	0	0	35(40) = 1,400	1,400
34	1	15	34(40) = 1,360	1,375
33	2	33	33(40) = 1,320	1,353
32	3	58	32(40) = 1,280	1,338
31	4	96	31(40) = 1,240	1,336
30	5	139	30(40) = 1,200	1,339
29	6	185	29(40) = 1,160	1,345

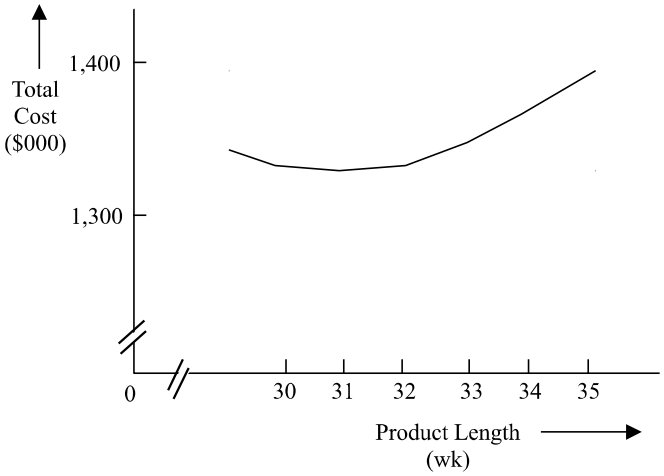

This document is available on studocu

Downloaded by username error (usernameerror768@gmail.com)

Solutions (continued)

16.

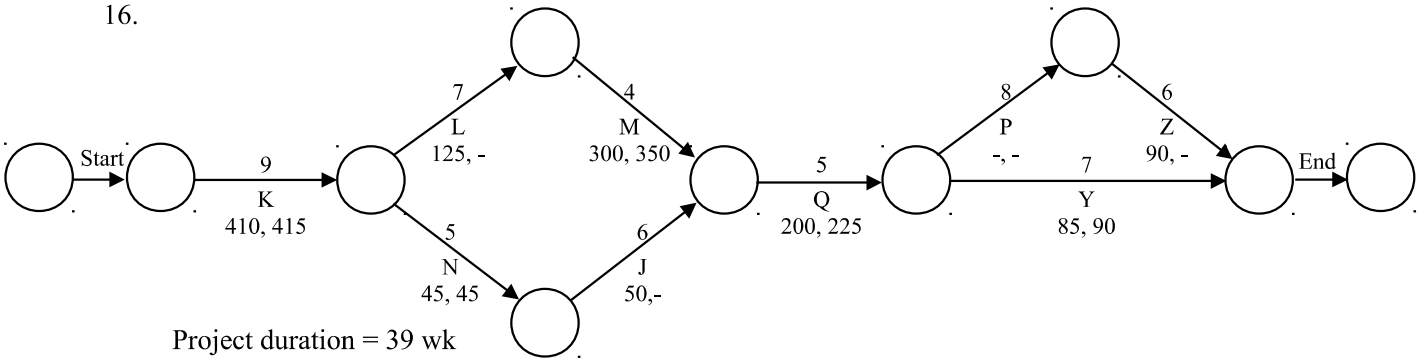

Project duration = 39 wk

Project length	Shorten activity	Crash cost
39 wk	–	0
38	Z	90
37	N, L	170 = (125 + 45)
36	Q	200
35	Q	225
34	M, N	345

Stop here; additional crashing will cost more than the $375 weekly penalty.

Downloaded by username error (usernameerror768@gmail.com)

This document is available on studocu

Downloaded by username error (usernameerror768@gmail.com)